NOTES

1) PLACE TEMPLATE ON TOP OF LOCKER UPPER SHELF
2) DETERMINE WHICH ORIENTATION SHOULDER PAD RACK SHOULD BE, AS SHOWN IN TOP VIEW
3) DRILL 1/8" DIA BLIND HOLES IN TOP OF LOCKER USING SHOULDER PAD RACK TEMPLATE AS A GUIDE
4) SECURE SHOULDER PAD RACK TO TOP OF UPPER SHELF WITH #10 X 3/4" WOOD SCREWS THAT ARE PROVIDED

REVISIONS				
ECO	REV	DESCRIPTION	DATE	BY

OPTION	ORIENTAION
1	LEFT FACING
2	FRONT FACING
3	RIGHT FACING

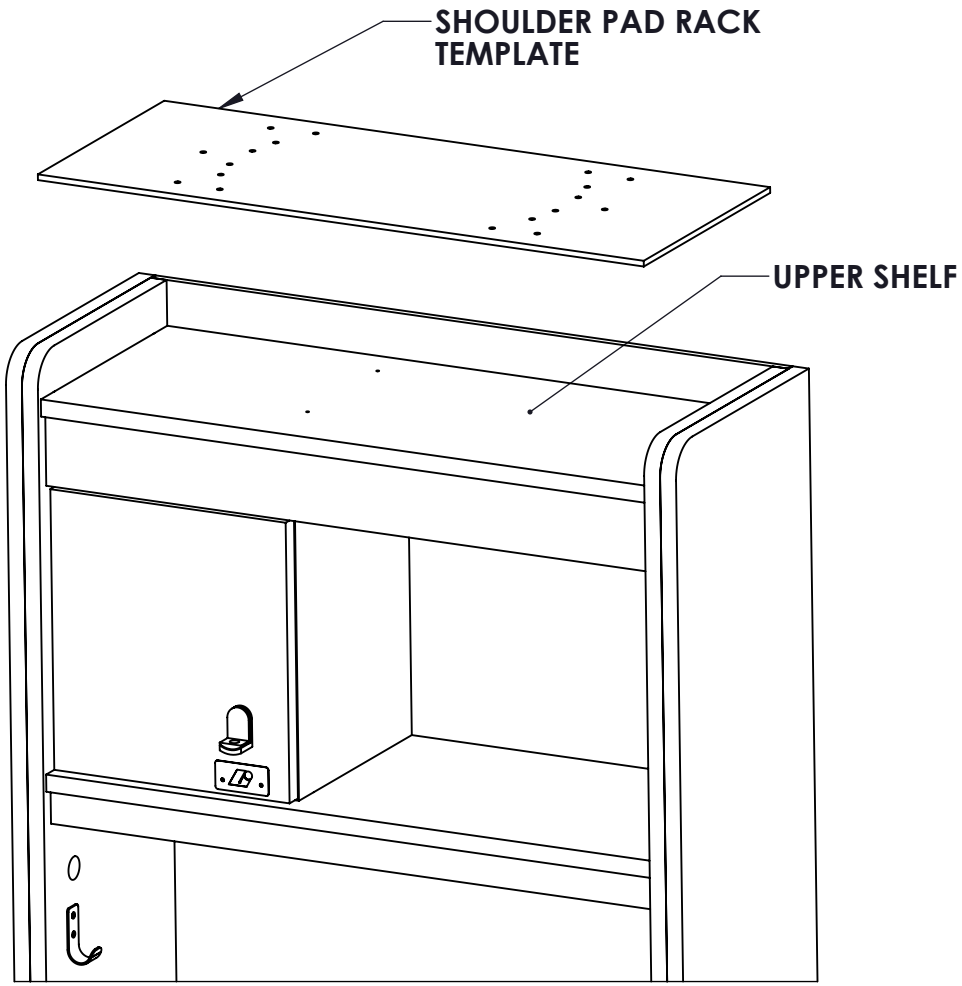

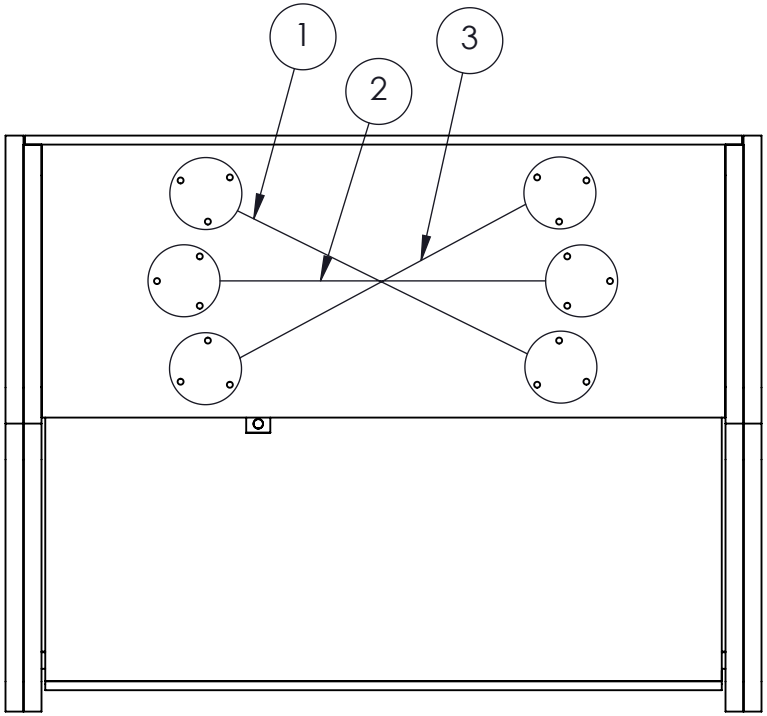

TOP VIEW

TOLERANCES UNLESS OTHERWISE SPECIFIED

INCHES
XX. ± .010
XXX. ± .005

FRACTIONAL
X/X. ± 1/64

ANGULAR
∠ ± 1/2°

UNLESS OTHERWISE SPECIFIED ALL DIMENSIONS ARE IN INCHES. METRIC DIMENSIONS WILL BE WITHIN [XX]

LIST INDUSTRIES INC.®
www.ListIndustries.com
401 Jim Moran Blvd., PO Box 9601
Deerfield Beach, FL 33442
Tel (954) 429-9155
Fax (954) 428-3843

DRAWN BY	DATE	DESCRIPTION				
MGJ	11/17/2017	SHOULDER PAD RACK TEMPLATE INSTRUCTIONS				
CHECKED BY	DATE					
APPROVED BY	DATE	SCALE	SHEET	PART NO.	DRAWING NO.	REV.
		:	1 OF 1		SA4106	

THIS DRAWING AND THE INFORMATION ON IT IS THE CONFIDENTIAL PROPERTY OF LIST INDUSTRIES INC., AND SHALL NOT BE COPIED OR DISCLOSED TO OTHERS WITHOUT WRITTEN PERMISSION. ONLY LIST INDUSTRIES INC. RESERVES THE RIGHT TO ALTER ANY DESIGN. ANY UNAUTHORIZED MODIFICATIONS RELEASES LIST INDUSTRIES INC. FROM ALL LIABILITIES.