SUPERIOR "ALL-STAR MVP" WELDED ATHLETIC LOCKER (PRODUCT No. ASBF- _ _ _)

ELEVATION ' '

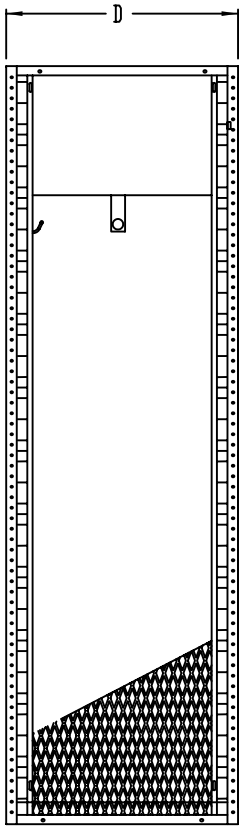

SIDE VIEW

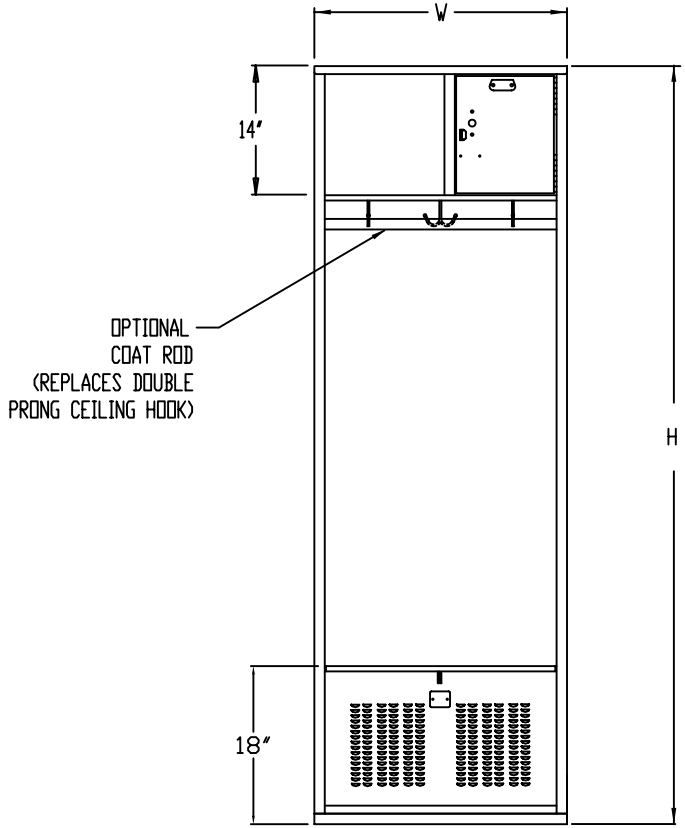

FRONT VIEW

LOCKER DETAILS :

EXTERIOR COLOR =
INTERIOR COLOR = SAME AS EXTERIOR
TOP = FLAT
LOCKS = FOOT LOCKER PAD LOCK ONLY
BOX DOOR = PAD LOCK OR BUILT-IN
DOOR VENTILATION = PLAIN
SIDE VENTILATION = 1/2" 13GA. FLT/EXP/MTL
BASE =
COAT ROD = 1" STAINLESS STEEL (OPTIONAL)
DOOR HINGE = 7 KNUCKLE, 13 GA. BUTT HINGE WELDED TO DOOR & RIVETED TO THE FRAME
SEAT HINGE = FULL LENGTH, STAKED PIANO HINGE WELDED TO SEAT & RIVETED TO FRAME

CONTRACTOR NOTE

ALL CONCRETE BASES SHOULD BE LEVEL AND TROWELED SMOOTH TO ASSURE PROPER INSTALLATION OF THE LOCKERS. ALL FLOORING MATERIAL ATTACHED TO THE FACE OF THE BASE SHOULD BE RECESSED AT LEAST 1/4" FROM THE TOP EDGE OF THE BASE. LOCKERS MUST BE ANCHORED TO WALL.

GAUGES

DOOR = 14 GA., C.R.S. BOX DOOR
SEAT = 14 GA., C.R.S. (REINFORCED)
FOOT LOCKER FRONT = 14 GA., C.R.S. SECURITY-PLUS VENTS
BASE = 14 GA., C.R.S.
TOP = 16 GA., C.R.S.
SHELF = 16 GA., GALVANNEAL
SIDES = 1/2" 13 GA. FLT/EXP/MTL, H.P.O.
BACKS = 18 GA., C.R.S.

SUPERIOR

THIS DRAWING AND THE INFORMATION ON IT IS THE CONFIDENTIAL PROPERTY OF LIST INDUSTRIES, INC. AND SHALL NOT BE COPIED OR DISCLOSED TO OTHERS WITHOUT WRITTEN PERMISSION. ONLY LIST INDUSTRIES RESERVES THE RIGHT TO ALTER ANY DESIGN. ANY UNAUTHORIZED MODIFICATIONS RELEASES LIST INDUSTRIES FROM ALL LIABILITIES.

TOLERANCES UNLESS SPECIFIED:
FRACTIONS: ±1/32 DECIMALS: ±.010 DEGREES: ±1°

Customer: CUSTOMER
Customer Order Number: PO#
Description: JOB NAME
JOB LOCATION

Drawn By:	Checked By:	Date:	Scale:
DRAFTER		DATE	NONE
Acad Number: PAGE NUMBER		Sheet # Of #	Revision:
Drawing Number: FOLDER NUMBER			