SUPERIOR "ALL-STAR MVP" WELDED ATHLETIC LOCKER (PRODUCT No. ASBL- _ _ _ )

# ELEVATION ' '

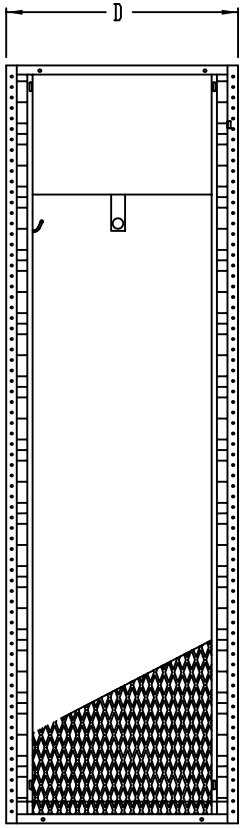


SIDE VIEW

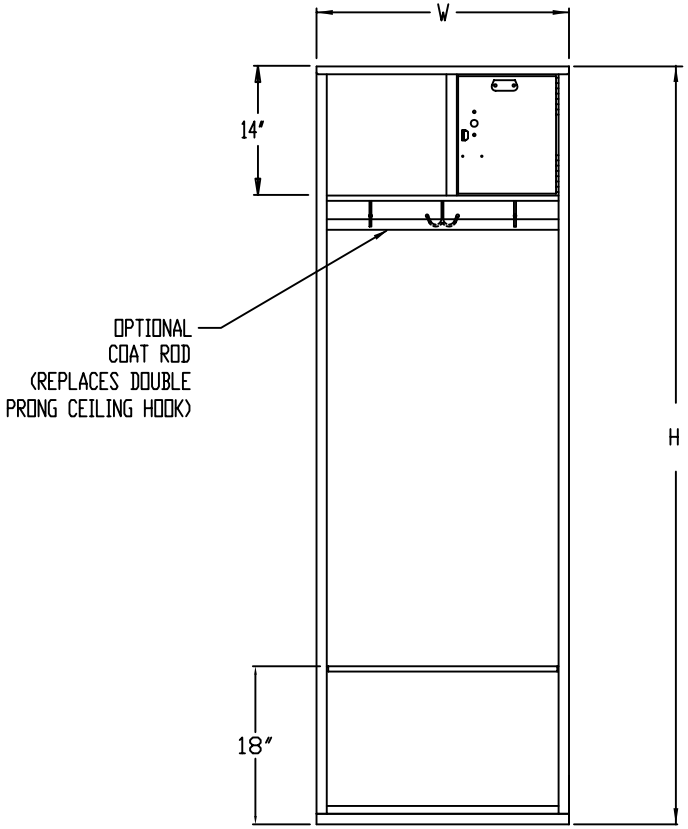


FRONT VIEW

## LOCKER DETAILS :

EXTERIOR COLOR =
INTERIOR COLOR = SAME AS EXTERIOR
TOP = FLAT
LOCKS =
BOX DOOR = PAD LOCK OR BUILT-IN
DOOR VENTILATION = PLAIN
SIDE VENTILATION = 1/2" 13GA. FLT/EXP/MTL
BASE =
COAT ROD = 1" STAINLESS STEEL (OPTIONAL)
HINGE = 7 KNUCKLE, 13 GA. BUTT HINGE WELDED TO DOOR & RIVETED TO THE FRAME

CONTRACTOR NOTE

ALL CONCRETE BASES SHOULD BE LEVEL AND TROWELED SMOOTH TO ASSURE PROPER INSTALLATION OF THE LOCKERS. ALL FLOORING MATERIAL ATTACHED TO THE FACE OF THE BASE SHOULD BE RECESSED AT LEAST 1/4" FROM THE TOP EDGE OF THE BASE. LOCKERS MUST BE ANCHORED TO WALL.

## GAUGES

DOOR = 14 GA., C.R.S. BOX DOOR
SEAT = 16 GA., C.R.S. (REINFORCED)
BASE = 14 GA., C.R.S.
TOP = 16 GA., C.R.S.
SHELF = 16 GA., GALVANNEAL
SIDES = 1/2" 13 GA. FLT/EXP/MTL, H.P.D.
BACKS = 18 GA., C.R.S.

SUPERIOR

THIS DRAWING AND THE INFORMATION ON IT IS THE CONFIDENTIAL PROPERTY OF LIST INDUSTRIES, INC. AND SHALL NOT BE COPIED OR DISCLOSED TO OTHERS WITHOUT WRITTEN PERMISSION. ONLY LIST INDUSTRIES RESERVES THE RIGHT TO ALTER ANY DESIGN. ANY UNAUTHORIZED MODIFICATIONS RELEASES LIST INDUSTRIES FROM ALL LIABILITIES.

TOLERANCES UNLESS SPECIFIED:
FRACTIONS: ±1/32 DECIMALS: ±.010 DEGREES: ±1°

| | | | | |
|---|---|---|---|---|
| Customer: CUSTOMER | Drawn By: DRAFTER | Checked By: | Date: DATE | Scale: NONE |
| Customer Order Number: PO# | Acad Number: PAGE NUMBER | | Sheet # Of # | Revision: |
| Description: JOB NAME JOB LOCATION | Drawing Number: FOLDER NUMBER | | | |

ASBL 11-21-12